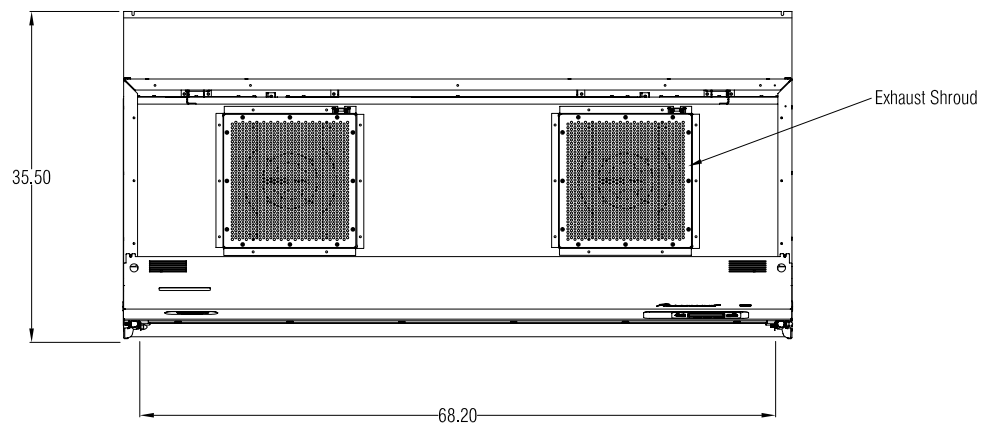

TOP VIEW

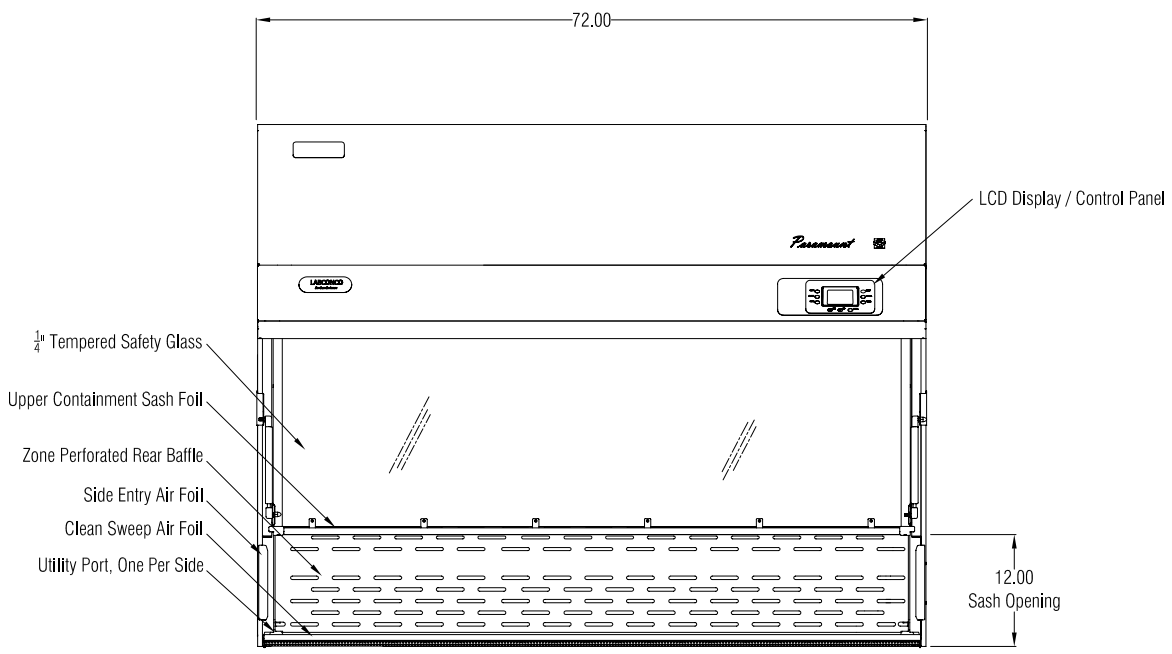

FRONT VIEW

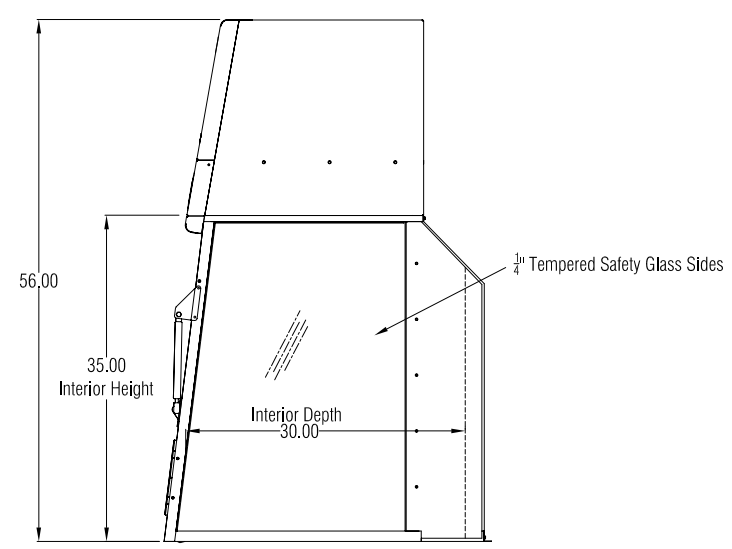

SIDE VIEW

GENERAL DESCRIPTION

6' Paramount Ductless Enclosure, Tall & Deep
Model: 6963603

Exterior Superstructure
* Tempered Glass
* Dry powder epoxy-coated aluminum

Interior Superstructure
* Dry powder epoxy-coated Aluminum and Steel

Sides
* 1/4" Thick Tempered Safety Glass

Filters
* Accommodates 8 Filters
* Gas-assisted filter clamping mechanism

Electrical Fixtures
* Pre-wired Fluorescent Light with Timers

Control Panel / LCD Display
* Face Velocity
* Filter Status and Types
* Touchpad Control of Enclosure Operation
* Set Filter Life and Check Timers
* Programmable Alarm Set Points
* Event timer

Wiring
* Wired at Factory
* 8.2' Power Cord with Plug

Sash
* Gas-Assisted
* Pivots to full open for cleaning and material transfer
* 1/4" Tempered Safety Glass
* 12" Operating Height
* Epoxy Coated Aluminum Frame

Baffles
* Perforated, Epoxy Coated, Pivots Downward for Cleaning

Air foil
* Extruded aluminum, Clean Sweep Airfoil

Motor
* ECM Impeller, Smart-Flow System to Adjust Motor Speed

Sensor
* Safety First Vapor Sensor
* Primary and Secondary Back-Up Sensors

Utility Port
* (2) 1.5" diameter utility ports with plugs

Assembly and Crating
* Pre-Assembled
* Palletized

Exhaust
* Exhaust Shroud, recirculates filtered air back into room

FUME HOODS for:

Protecting your Laboratory Environment
LABCONCO

Labconco Corporation
8811 Prospect Avenue
Kansas City, Mo 64132-2696
(800) 821-5525
www.labconco.com

Order Number:

No.	Date

Date:
2-10-2010

Drawing #
6963603

Drawn By:
Luke Savage

Checked By:

Approved By:

Sheet No.

Log Number: