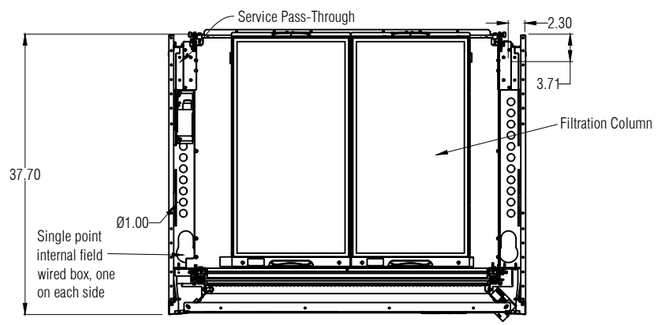

TOP VIEW

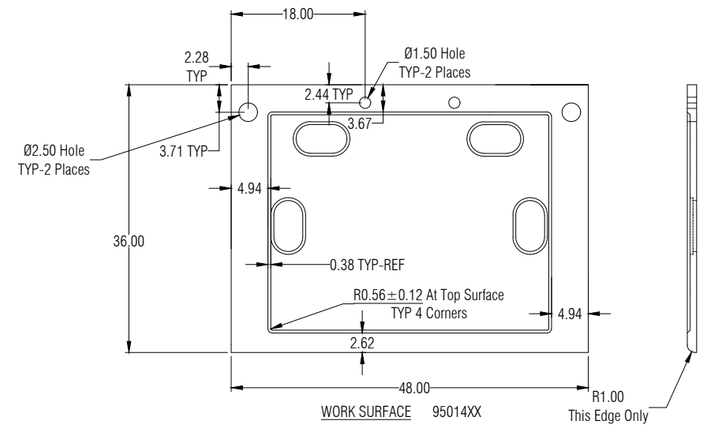

WORK SURFACE 95014XX

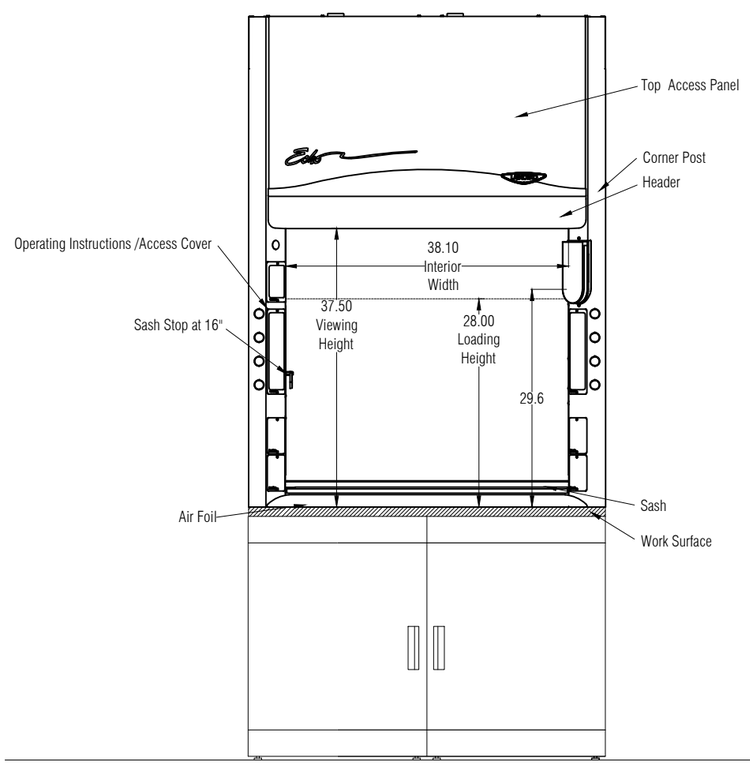

FRONT VIEW

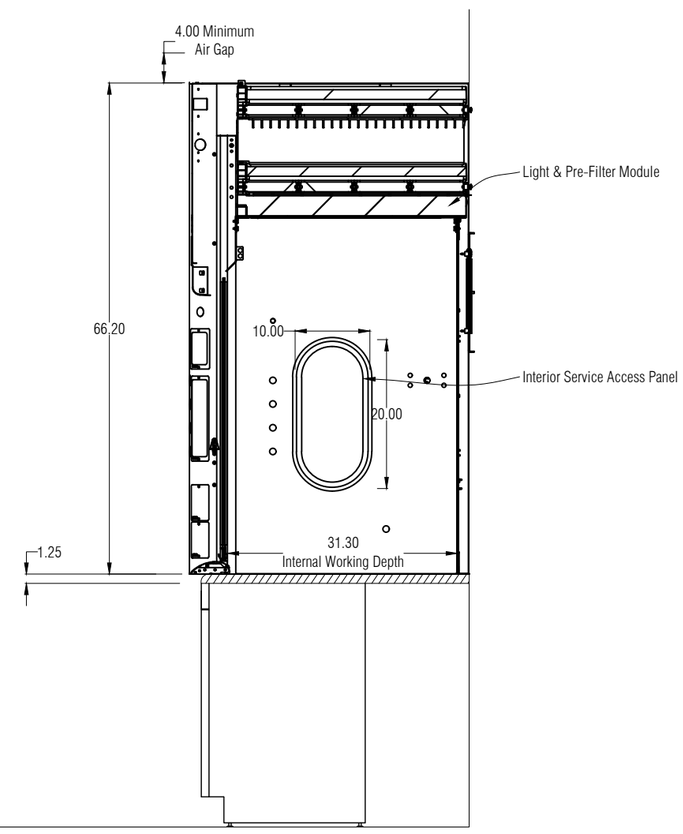

SIDE VIEW

GENERAL DESCRIPTION

4' Protector Echo Filtered Fume Hood
Model: 180410200

Exterior Superstructure
* Double Wall Construction * 18 Gauge Cold Rolled Steel

Interior Superstructure
* Galvanized Steel (standard)

Left / Right Facia:
* Powder Coated Steel * Color: Glacier White

Liner Material
* Molded Composite Sheet

Side Panels
* Both Sides * Removable * Color: Glacier White

Interior Access Panels
* Right and Left Sides
* Gasket Provided

Corner Post with Access Covers
* Right and Left Sides
* 18 Gauge Cold Rolled Steel

Air Foil
* Cold Rolled Steel * Powder Coat Finish

Sash
* Vertical Travel
* Tempered Safety Glass
* Counter Weighted and Balanced
* Pulley System
* Sash stop @ 16"

Electrical Fixtures
* Fume hood wired at the factory – Connections made inside a 4x7 Junction Box
* 100–115V, 50/60 Hz or 208–230V, 50/60 Hz
* LED Lights – One light bar in each filter column

Service Options
* Part numbers ending in "0" have no services or duplexes
* Part numbers ending in "1" have 2 services and no duplexes
* Part numbers ending in "2" have 2 services and 1 duplex
* Models with 2 services will have one on each corner post with a Cold Water valve on the left and a Gas valve on the right*
* Additional service fixture kits available upon request

GFH Filtration Technology
* Neutrodine Unisorb Filters (9577420 – Sold Separately)
* Compatible with over 700 chemicals
* HEPA filters available (9577421) Add 4" to overall height
* eGuard remote monitoring software
* Wifi, Bluetooth, and Ethernet connectivity
* Filters are approved for specific applications
* Contact Labconco to request a chemical assessment prior to purchase
* Part number may change based on results of chem assessment

Work Surface
* Black Epoxy Work Surface # 95014XX (See cupsink for "XX")

Cupsink Location Options (P/N 4005200)
* Right Side "02"
* Right Rear "01"
* Left Rear "10"
* Left Rear "20"

Cabinets/Stands
* Required

Available Hood Options
* No Windows (180410200)
* With Side Windows (181410200)
* With Side and Back Windows (182410200)

Assembly and Crating
* Pre–Assembled
* Palletized

SCALE: Scaled to fit

FUME HOODS for: LABCONCO 4' BENCHTOP ECHO FUME HOOD

LABCONCO®

LABCONCO CORPORATION • KANSAS CITY MO USA 64132
800-821-5525 / 816-333-8811 • labconco.com

No.	Date

Date: 7/27/2020

Drawing # 180410200

Drawn By: K. Fulmer

Checked By:

Approved By:

Sheet No.